PRODUCT CATALOG

BLINKTROLL MK V

BLINK TROLL
ROBOTIC SYSTEMS



BLINKTROLL | MOVING TARGET SYSTEM

DELIVERS TRAINING EFFECT

PRODUCT DESCRIPTION

TRAINING EFFECT ON MOVING THREATS

THE BLINKTROLL MOVING TARGET SYSTEM IS REMOTE CONTROLLED VIA ITS OWN GENERATED WIFI SIGNAL AND WILL RUN IN PRE-PROGRAMMED SEQUENCES AND PATTERNS. YOU CAN CONTROL IT ON DEMAND WITH REAL-TIME START/PAUSE/STOP COMMANDS OR IN DRONE MODE - THE BLINKTROLL APP WILL GIVE YOU CONSTANTLY UPDATED FEATURES AND CONTROL MODES. WHICH ADD EXTRA DIMENSIONS TO YOUR MOVING TARGET TRAINING AND INVOKE BETTER AND FASTER DECISION MAKING IN COMPLEX LIVE SCENARIOS FOR YOUR TEAM.



PRODUCT DESCRIPTION

WHAT IT CAN DO

CARRYING UP TO 10 KG / 20 LBS OF STEEL SUSPENDED BELOW THE ROBOTIC SYSTEM, THE BLINKTROLL CAN RUN UP TO 4M/SEK / 9FPS AND AS LOW AS 0,3M/ SEK, / 0,6 FPS, ALL THE WHILE BEING CONTROLLED WITH A TABLET. FULLY PROGRAMMABLE IT CAN “HIDE” BEHIND BARRICADES AND ACT IN A RANDOM MANNER. A SLIDER IN THE APP ALLOWS MANUAL OPERATION WHEN TIMING IS CRUCIAL.

THE BLINKTROLL | MOVING TARGET SYSTEM CAN BE USED FOR EVERYTHING FROM LONG-RANGE SNIPER TRAINING TO CLOSE QUARTERS PISTOL TRAINING.


1





PRODUCT
DESCRIPTION

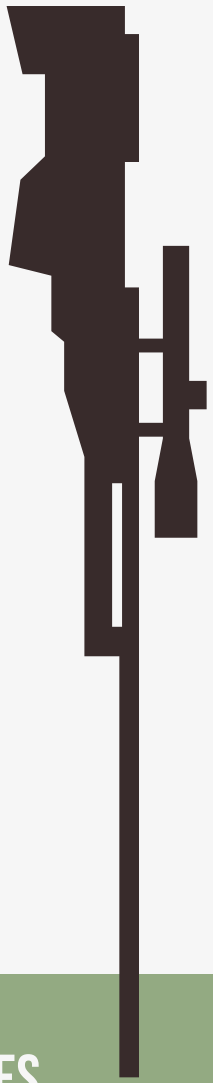

BLINKTROLL MK V

THE BLINKTROLL MOVING TARGET SYSTEMS IS ALREADY IN OPERATION WITH SPECIAL FORCES, REGULAR FORCES AND POLICE UNITS IN 9 COUNTRIES.
DURING ITS EXISTENCE THE SYSTEM HAS PROVIDED COUNTLESS SOLDIERS AND OPERATORS WITH THEIR FIRST MOVING TARGET EXPERIENCE.

DETAILS MATTER

EVEN THE SMALLEST OF DETAILS MATTER IN A MACHINERY BUILT TO RUN ALL DAY. THIS IS WHY WE SUPPLY THE WHOLE SYSTEM, SO THAT YOU CAN RIG UP WITH WHAT YOU NEED AND GET TO THE MAIN PART: TRAINING.

BLINKTROLL MK VS MOST IMPORTANT UPGRADES

- NEW ELECTRONICS WITH 35AMP MOTOR CONTROLLER CAPACITY, COMPARED TO 20A IN MK 4
- NEW 10.000MAH BATTERIES WITH PROTECTION CIRCUIT.
- NEW EASY TO USE CHARGER WITH STORAGE MODE.
- IMPROVED SHRAPNEL SHIELD AND END STOPPERS
- IMPROVED BELT DRIVES AND O-RINGS ON WHEELS FOR PRECISE MOVEMENTS.
- NEW ANTENNA SYSTEM FOR LONG RANGE STABILITY
- NEW SOLID STORAGE FLIGHTCASE

PRODUCT DESCRIPTION

THE IMPORTANT ACCESSORIES

YEARS OF EXPERIENCE AND TENS OF THOUSANDS OF ROUNDS HAS TAUGHT US WHAT WORKS.

HARDENED BOLTS WILL NOT GET SHOT OFF LIKE ORDINARY BOLTS AND STOP TRAINING.

OUR CUSTOM-MADE CHAIN HOISTS COME WITH LONG CHAINS TO MAKE RIGGING THE ROPE EASIER. SLINGS AND STRAPS AND SHACKLES SUITED FOR THE TASK.

KEEP IT ALL ORGANIZED AND READY FOR NEXT ROUND IN THE TRANSPORT CASE.



INFRASTRUCTURE

• LOGISTICS AND INFRASTRUCTURE IS VITAL PART IN ANY OPERATION AND TRAINING.

• WE KNOW WHAT WORKS AND SUPPLY THOSE ITEMS SO YOU DON'T HAVE TO SPEND DAYS ON LOGISTICS.

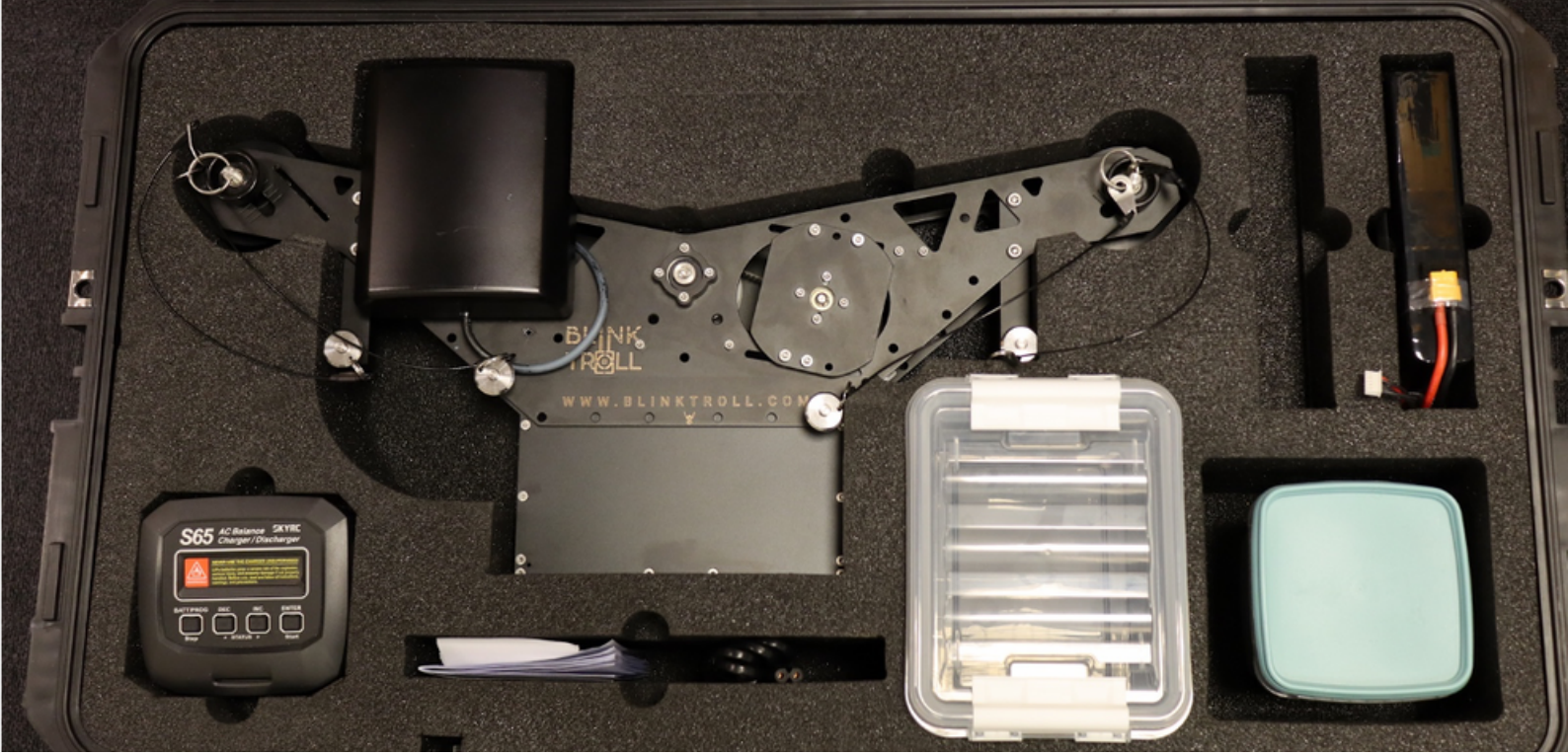
BLINK TROLL
WWW.BLINKTROLL.COM
S65 AC Balance Charger / Discharger SKYRC

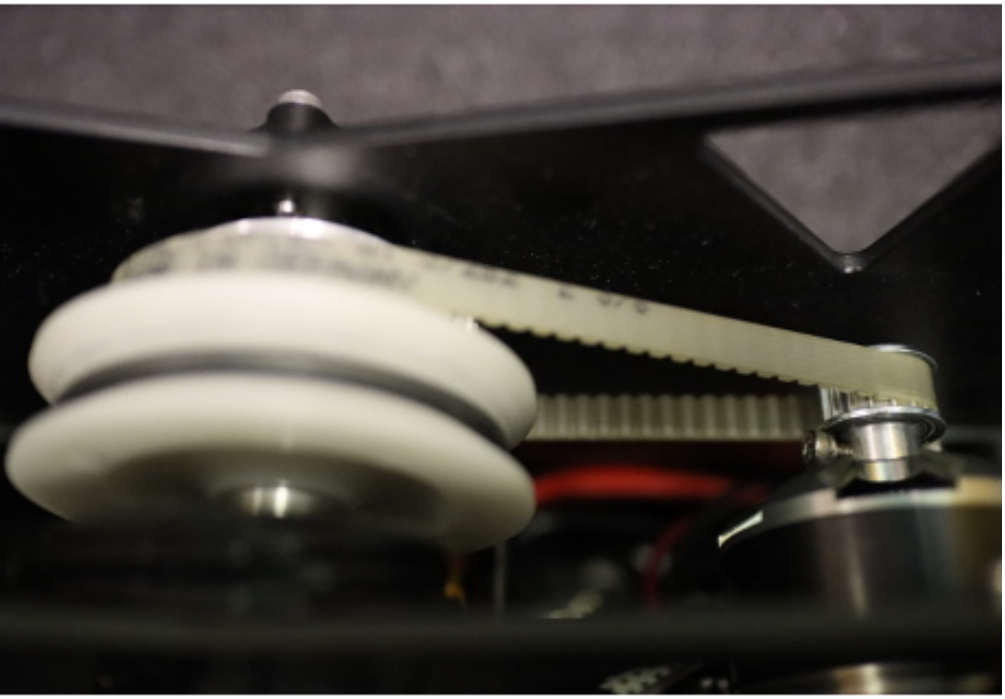

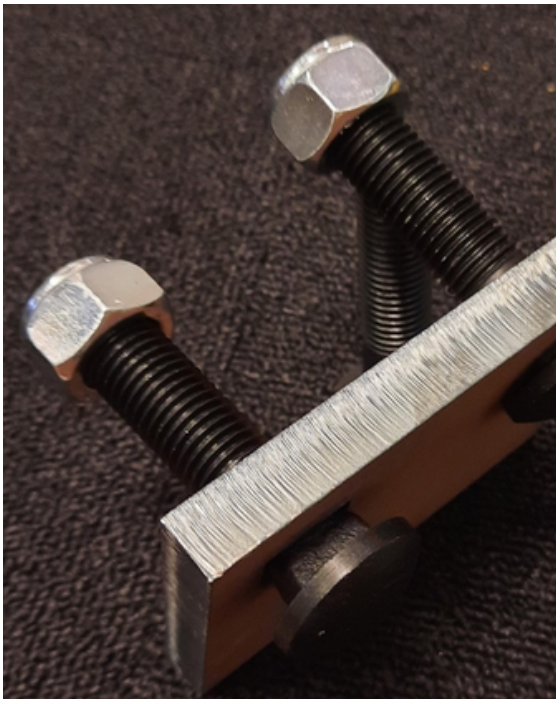


SPLINTSKJOLD
PLASSERES OVER
GUMMIMATTE
FRONT MOT SKYTTER
WWW.BLINKTROLL.COM

RANGE SETUP



ROPE/WIRE ATTACHED TO A TREE AND TIGHTENED WITH A 500KG CHAIN HOIST.

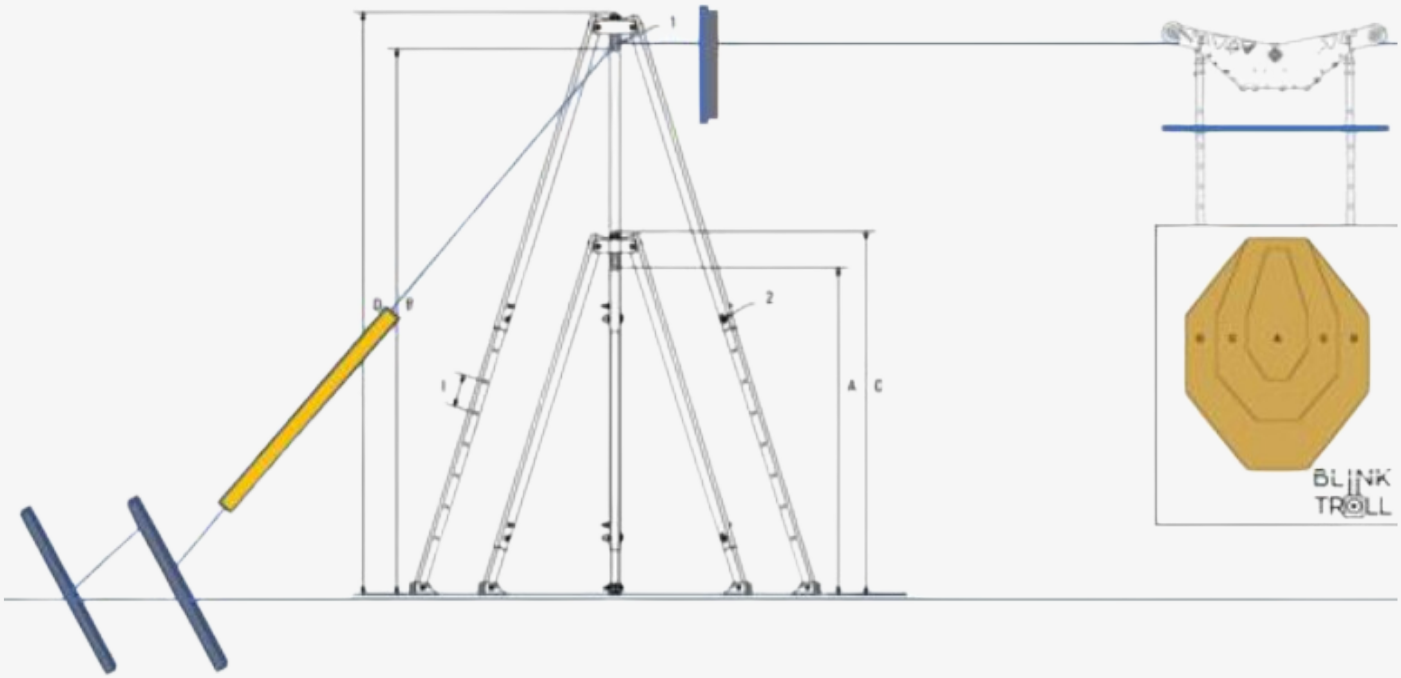

DUAL SAND ANCHORS AND 2,4X3M TRIPODS. ROPE/WIRE APPROX 3M ABOVE GROUND.




POLITI
POLITI

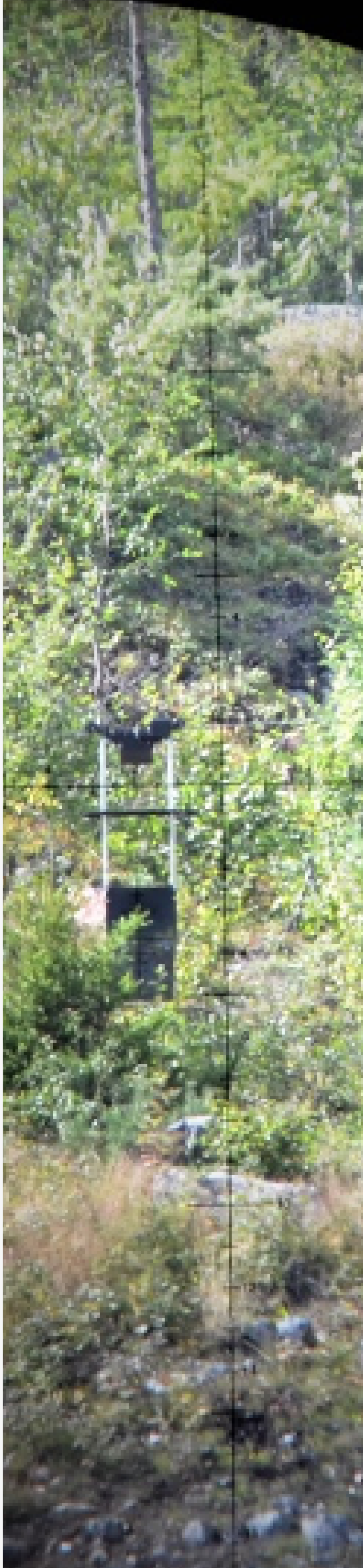

BLINK TROLL

ROBOTIC SYSTEMS

CATALOG

BLINKTROLL MK V

BLINKTROLL ROBOTICS APS
ADRESS: DRONNINGENSGADE 40, 5000 ODENSE C, DENMARK
CONTACT: HELLO@BLINKTROLL.COM
CVR NR. 44599198